Neon® Multi
(Measuring disinfectants, pH, temperature and optional ORP)

Multi channel water monitoring instrument

Neon® Multi is a leading edge measuring and control instrument. Its range of functions can be tailored according to customers‘ applications.
The entry level version is equipped with 3 measurements: disinfectant, pH and temperature. Additionally, redox potential and 5th measurement can be added (Total chlorine or conductivity).
Neon® Multi‘s water measurement process can be controlled at any time, from any place, on any device via Kuntze‘s Cloud Connect® service.
All Kuntze products are Made in Germany.

Applications

Technical data

Measuring parameter

Disinfection	Free Chlorine, Chlorine Dioxide
	0..1000µg/l, 0.. 5.00 / 10.00 / 20.00 mg/l
	Ozone
	0..1000µg/l, 0.. 5.00 / 10.00 mg/l
	Hydrogen Peroxide
	0.. 30.00 mg/l
Temperature	0.. 50.0 °C (32.. 122 °F)
pH	0-14.00 pH
Redox (optional)	-1500.. +1500 mV
5th measuring input (optional)	Total chlor: 0.. 10.00 mg/l
	or Conductivity: 0 - 100,0 mS/cm

Input characteristics

Temperature measuring range	0.. 50°C	
Temperature coefficient	0,0.. 8,0 %/K adjustable	
Digital input	Flow control, external controller stop, 2x level control, activation 2nd control parameter set	
Ambient conditions	pH-range	6.. 8 pH (free Chlorine) 6.. 9 pH (Chlorine dioxide, Ozone, Hydrogen peroxide) total Chlorine depending on sensor
	Flow	>20 l/h, constant
	Min. conductivity	>150 µS/cm
	Temperature	Depending on sensor, assembly and reference measurement

Output characteristics

Alarm relay	up to 4 potentialfree CO, max. 250 V; 2 A, 550 VA	
Output signal	Optional: 5 x 0/4.. 20 mA (scaleable, galvanically isolated)	
	Load 500 Ohm	
	Registration range	Scaleable within the measuring range
	Baud rate	19200 kbs (Modbus)
	Data format	8 bit

Power supply

Line voltage	85.. 265 V AC / DC, 50.. 60 Hz
Power consumption	10 VA

Ambient conditions

Temperature	Storage	-20.. +65°C
	Operation	0.. +50°C
Humidity	max. 90% rH at 40°C (non-condensing)	
Protection class	Wall mounted IP 65	

Controller

Control response	on/off controller (adjustable hysteresis) P/PI/PID controller (pulse-pause, pulse-frequency or continous output) 3-point controller with or without position feedback)
Relay	8 relays, each a potential-free CO contact, max. 250 V, 2A, 550 VA
Start delay	0.. 200 sec till controller active
Digital input	see Input characteristics

Certificates and approvals

CE-Symbol	The product meets the requirements of the harmonized European standards and complies with the legal requirements of the EC directives.
EMV/EMC	EN 61000 6-1 (3) EN 61000 6-2 (4) EN 61326-1

Design configuration

Material	ABS
Dimensions	260x254x140mm
Weight	1,9 kg
Connection	cable inlet: 2x M16, 2x M12 + optional: 2x M12 und 1x M25 plug-in terminal: rigid/ flexible 0,14 - 1,5 mm² relays / power supply - starr/flexibel 0,2-1 / 0,2-1,5 mm² distribution block 0,5-2,5/ 0,5-2,5 mm²

Mechanical drawing

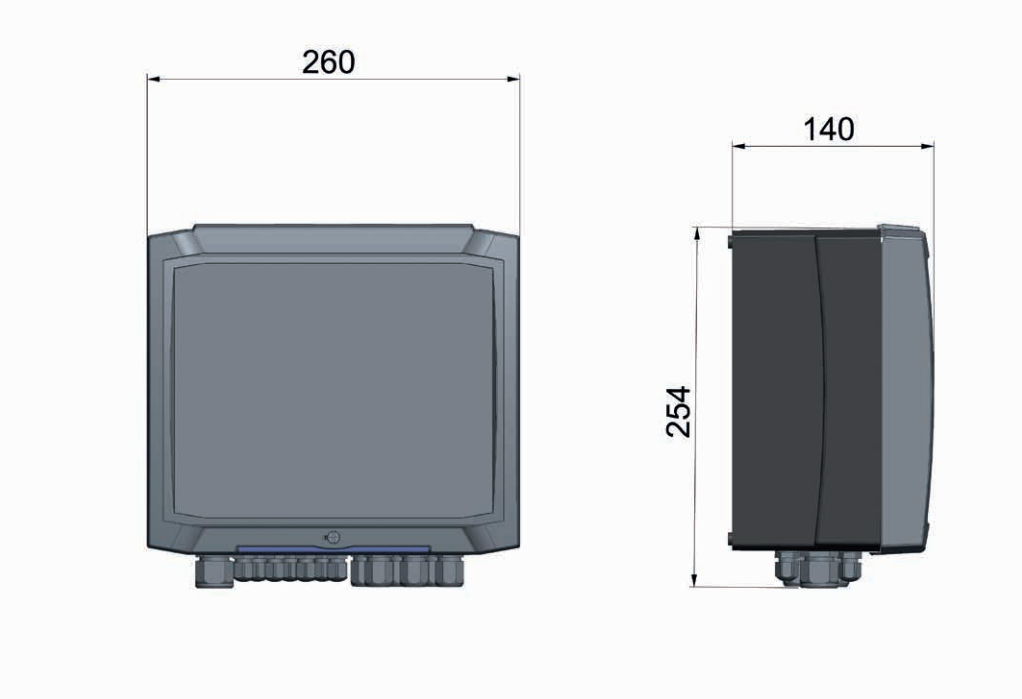

Interfacen diagram